Evaluation of Ultra Low Concentration Surfactant System for Chemical Flooding
Introduction

Improved oil recovery is said to be the heart of oil production (Kokal and Al-Kaabi; 2010). As the increase of oil recovery beyond its limits can alleviate the issues related to the global energy supply. The world daily production of oil which comes from reserves replacement and mature fields are not meeting up the growing demand for oil globally. This challenge calls for the advanced methods of increasing recovery factor. Oil reservoirs that have undergone primary production and secondary waterflooding usually have an estimated 35-45 percent of the original oil in place remaining when the economic limit of the waterflooding has been attained (Zitha et al.2011). While tertiary enhanced oil recovery which involves the injection of fluids that will interact with the reservoir rock /oil creating conditions that are favourable to oil recovery after secondary waterflooding. These interactions might be oil swelling, lowering of interfacial tension, oil viscosity reduction. An effective EOR process must be able to mobilise residual oil efficiently by creating an oil bank to the production wells. Tertiary chemical oil recovery includes surfactant flooding, polymer flooding, and alkaline-surfactant-polymer flooding (Green and Willhite. 1998; Kokal and Al-Kaabi. 2010; Pwaga et al. 2010).
Surfactants are used in chemical flooding to reduce oil/water interfacial tension and increase the capillary number. The most important designing factor in surfactant flooding enhanced oil recovery is to choose a surfactant formulation capable of mobilising oil without phase separation and adsorption. For a surfactant to create low interfacial tension, there has to be a compatibility between the surfactant blend, reservoir conditions and crude oil. Other requirements for surfactant selection includes thermal stability, brine electrolyte compatibility and commercial availability at sufficient quantities. These requirements are necessary because of the harsh reservoir conditions of petroleum reservoirs which sometimes make it very challenging for chemical enhanced oil recovery (Barnes et al.2008; Bera et al.2001; Donaldson et al.1989).
Due to the high cost of surfactant flooding which is as a result of the cost of chemicals, implementation of this technique is inhibited. This has brought about different researchers to look for ways in reducing the cost of application by an order of magnitude. Low concentration surfactant flooding has been the focus of recent research in a bid to create a more economical means of lowering interfacial tension. The use of low concentration surfactant can also lead to lower adsorption in the porous medium and limit the risk of emulsion formation in surface facilities (Michels et al.1996). Anderson et al (1976) studied interfacial tension and phase behaviour in a surfactant-brine-oil system. They discussed that at low surfactant concentration, less than 1% w/w, a low interfacial tension can also be achieved. They also showed that at low surfactant concentration, the lowest interfacial tension can be achieved at a particular hydrocarbon chain length. Cayais et al (1975) measured interfacial tension using very low surfactant concentrations ranging from 0.1 to 0.5 % w/w while studying low interfacial tension in complex hydrocarbon mixtures. They were able to show that very low surfactant concentrations can reduce interfacial tension by 2 to 3 magnitudes.
A surfactant such as alcohol alkoxy sulfate (AAS) has been used to create low interfacial tension in several studies. The phase behaviour experiment in these studies have been conducted using NaCl as the only salt present in the brine and light crude oil or decane as the oil phase. The conclusions are that alcohol alkoxy sulfate can achieve high solubilisation ratio which is an indicator of its ability to create low interfacial tension (Elraeis and Ahmed, 2014; Majadie et al.2015, Puerto et al.2014). Since AAS has been identified to create low interfacial tension in light crude and monovalent brine, it is also necessary to demonstrate its ability to be effective in reservoir conditions and on a different crude oil system.
This paper will present work to evaluate very low concentration alcohol alkoxy sulfate in hard brine and medium crude oil. Other objectives of this paper include

- To evaluate surfactant blend of very low concentration AAS with co-surfactant internal olefin sulfonate (IOS) with medium crude oil at reservoir conditions
- To evaluate blend of very low concentration AAS and methyl ester sulfonate as a co-surfactant. Methyl Ester sulfonate (MES) is a fatty acid surfactant.
- To compare stability and phase behaviour of AAS with and without co-surfactants.

- To investigate the potential of very low concentration AAS and co-surfactant in oil recovery.

Background

To mobilize the remaining oil trapped by capillary forces in the reservoir, a capillary number large enough to overcome the capillary forces has to be created to allow the trapped oil to flow. The capillary number during waterflood which can produce oil to residual saturation has to be increased in an order of two to three magnitudes to enable additional oil recovery. Capillary number can be increased in so many ways, they include

- Increase of displacing fluid viscosity
- Increasing the displacement pressure gradient
- Decreasing interfacial tension

Reduction of interfacial tension between the displaced fluid and displacing fluid is the most practical option for increasing the capillary number (Ahmed and Meehann, 2012). There have been several equations and experiments which have data's showing that the increase in capillary number causes a reduction in residual oil saturation (Sheng, 2015). Equation 1 below shows the relationship between capillary number and interfacial tension which is the ratio of the viscous forces to the capillary forces

$$N = v.\ \mu / \sigma\ (\cos\theta) \qquad [1]$$

Where N is the dimensionless capillary number, v is Darcy velocity displacing fluid (m/s),μ is the viscosity of the displacing fluid and σ is the interfacial tension that exists between the displacing and displaced fluids while θ is the contact angle (Terry,2001; Ahmed and Meehan,2012;Puerto et al.2015; Iglauer et al.2010).

Surfactants are transported in the reservoir in the form of microemulsion during surfactant flooding. This is as a result of the interaction between the aqueous phase containing the surfactant and the hydrocarbon phase (Bae, 1974). It has been shown that the key factor in determining the success of oil recovery is by interpreting the oil/brine/surfactant system (Healy et al.1974). Microemulsions are thermodynamically stable, hence do not require high energy input or shear conditions for their formation. The microemulsion phase is transparent, has low viscosity and can create low interfacial tension. The aqueous phase may contain salts and the oil can contain complex hydrocarbons. Winsor first described the behaviour of microemulsion as type I (oil in water) which has a lower phase microemulsion in equilibrium with excess oil, type II (water in oil) with upper phase microemulsion in equilibrium in excess brine and the type III which has middle phase microemulsion in the water–oil region (Salager et al.1979). To find regions where ultra-low interfacial tension is created by high solubilisation ratios, the microemulsion phase behavior needs to be studied. This established relationship between interfacial tension and microemulsion is what is used to screen surfactants suitable for chemical flooding.

When the salinity of anionic surfactant solution is increased, there is a transition of microemulsion phase from Winsor type I to type III to type II. The transition of surfactants from one phase to another phase is dependent on the several factors such as temperature, surfactant type and structure, oil properties and brine electrolyte. The low interfacial tension is measured by examining the phase behaviour of the microemulsion system where a high solubilisation ratio is obtained. It is crucial that the surfactant forms a three-phase system (middle phase microemulsion) when it is injected into the reservoir to achieve the very low interfacial tension. This is because the lowest interfacial tension is achieved when a middle phase microemulsion is formed (Hirasaki et al. 2011; Buijse et al. 2010).

To increase surfactant solubility of anionic surfactants in brine and to prevent the formation of viscous phases, co-solvent such as alcohol and co-surfactants can be added. The solubilisation parameter indicates the amount of water and oil that has been solubilised in the microemulsion phase per volume of surfactant (Spildo et al. 2012). The oil or water solubilisation is defined as the volume of oil or water that has been solubilized into the microemulsion phase per unit weight of the surfactant. Oil solubilisation ratio can be expressed as the ratio of the volume of oil to the volume of the surfactant

(Vo/ Vs) and water solubilisation ratio as the ratio of the volume of water to the volume of surfactant (Vw/Vs) (Chou and Shah. 1981; Elraies and Shehzad-Ahmed.2014).
Healy et al (1976) represented oil and water solubilisation ratio graphically. They measured each volume of solubilised oil and water in neat surfactant solution to obtain water and oil solubilisation ratios. This data was used in obtaining optimal salinity by plotting the solubilisation ratio of oil and water as a function of the salinity for salinity scans that look promising. The point at which equal oil and water volume have been solubilised is the point on the graph were the solubilisation ratio of oil and water intersects. This defines the optimal salinity. This same method is used in this paper to obtain solubilisation ratio and optimal salinity.
The optimal salinity is the salinity at which the interfacial tension between oil and microemulsion phase is equal to the interfacial tension between the microemulsion and water phase. As a result of the relationship between the optimal salinity and interfacial tension, it is necessary to estimate both properties when choosing a surfactant blend for chemical flooding (Elmofty, 2012).
Huh proposed a correlation that relates the interfacial tension to the solubilisation ratio and the interfacial tension at optimum salinity. This equation proposed by Huh was able to give an accurate estimation of interfacial tension (Levitt et al. 2006).

$$\sigma = \frac{C}{y^2} \qquad [2]$$

Where C is a constant and is approximately 0.3mN/m for most crude oil. σ is interfacial tension and is y the solubilisation ratio (Fuseni et al. 2013; Huh.1979). For a surfactant to create very low interfacial tension, the solubilisation ratio should be above 10.

Experimental materials and methods

The composition of the hard brine used in this study is given below in table 1. De-ionized water was used to prepare the brine.

Table1: Brine composition

Salts	Concentration (g/litre)
NaCl	56.6
$CaCl_2.2H_2O$	6.3
KCl	0.56
$MgCl_2.6H_2O$	8.16

The different surfactants used for this study are given in table 2 below.

Table 2: List of surfactants

Surfactant name	Abbreviated name	Product trade name	% wt.	Chemical Class
Internal Olefin Sulfonate	IOS	Petrostep S2	22.69	Sulfonate
Methyl Ester Sulfonate	MES	Petrostep C-10	36.62	Sulfonate
Alcohol Alkoxy Sulfate	AAS	Petrostep S13C HA	82.84	Sulfate
Anionic Olefin	AO	Petrostep S3B	19.45	Sulfonate

The crude oil and core properties are given in table 3 and 4 below.

Table 3: Crude oil properties

Viscosity@60°C	Density	API
30cP	0.9267g/cm^3	21°

Table 4: Core properties

Absolute Permeability	Length	Porosity	Diameter	Pore Volume
500mD	10.15cm	18%	2.52cm	9.23cm^3

All surfactants used are in this study are anionic. Screening of surfactants involves using the pendant drop method. The pendant drop method cannot be used to measure very low interfacial tension but it can be used to identify surfactants that can create low interfacial tension without co-surfactants. Usually, surfactants that can create very low interfacial tension do not create a perfect drop shape with oil when using the pendant drop method. This observation was used to select the primary surfactant as the other surfactants formed a perfect drop shape with hard brine and crude oil.

Aqueous stability

Aqueous stability test ensures that the surfactant is injected in a single phase, does not form precipitates and is not cloudy when used for chemical flooding. For this to happen, the surfactant and co-surfactant have to be compatible with the injected brine. The brine was mixed with the surfactant and co-surfactant, and the solutions were kept in a sealed test tube for three days in the oven at 60°C. After three days, solutions that are cloudy will be discarded and transparent solutions were selected for phase behavior experiment. All aqueous solutions are meant to be clear up to the highest salinity with co-surfactants. As a transparent injection solution will prevent the formation of precipitates, gels and crystal when injected into the reservoir.

Phase behaviour experiment

Phase behavior experiment was conducted for salinities ranging from 1% -7%. Aqueous and oil phases were put in a 5ml glass pipette. The bottom of the pipette was flamed sealed while the top of the pipette was closed with a rubber stopper. Different blends of aqueous solutions were tested. The first blend is AAS/ IOS. The second blend is AAS/ MES. The third blend contains AAS as the only surfactant. The aqueous and oil phase were introduced volumetrically into the pipette using a pipette. Pipettes were arranged in racks in order of increasing salinity. The volume of both phases (aqueous and oil) were 2.5ml each in the pipette. In the aqueous phase, the concentration of the surfactant was kept constant while the salinity of the brine was varied within the range of 1%-7%. 0.1vol% concentration was used for all surfactants and co-surfactants. The pipettes were allowed to equilibrate in the oven at 60ºC which corresponds to reservoir temperature. A thermometer is placed in the oven to monitor any temperature changes. After waiting for 30 minutes the pipettes were agitated mildly by inverting the pipette to enhance mixing of the aqueous and oil phase. The pipettes were monitored daily with subsequent agitation. The volume of each phase was recorded at time intervals after three days. Solutions in the pipettes that did not form any microemulsion phase within the first seven days were discarded. Phase volumes were measured until there was no further change in the microemulsion phases. The volume of the aqueous phase and oil phase was used to estimate the solubilisation ratio.

Core flooding experiment

To validate the effectiveness of very low concentration AAS with and without co-surfactant, core flood experiments were conducted. The core flood system used consists of a core holder, accumulators for fluid injection. A differential pressure transmitter was connected and the injection and production points in the core flood system to measure the differential pressure. A Teledyne pump was connected to the accumulator to pump the fluids into the core sample. A back pressure regulator was used to apply a back pressure of 30psi.This pressure was applied to the production end of the core flood system to control the pressure in the system. The differential pressure and volume produced were recorded at different times. Differential pressure data was collected using the Bronkhorst

software installed in a computer connected to the differential pressure transmitters while the oil recovery data was collected using a test tube.
The core flooding experiments are conducted with a Bentheimer sandstone core sample. The core samples were cleaned in a soxhlet using toluene and methanol to dissolve all salts, oil and chemicals from previous experiments. The core sample was kept in the oven to dry. A vacuum pump was used to saturate the core sample and the pore volume was calculated. The core flood system was set up with the core sample placed in the core holder. A confining pressure of 500psi was applied to the core holder. Brine was injected into the core sample at different flow rates to determine the absolute permeability. After which the core sample was flooded with crude oil to establish connate water saturation. Waterflooding was conducted at a flow rate of 0.1ml/min which is equivalent to oil field flow rate of 1ft/day. After waterflooding, the core sample was taken out of the core holder and another core sample with identical properties was placed in the core holder. Surfactant-enhanced waterflooding was conducted for all surfactant blends to have all the experiments start with the same initial conditions. For the surfactant flooding, the core sample was flushed with several volumes of surfactants. This was done to fulfil surfactant adsorption on the surface of the rock. Oil was injected at a flow rate of 0.1ml/min and then injection of aqueous solution to displace the oil. Figure 1 is a schematic of the core flood apparatus used for displacement experiment.

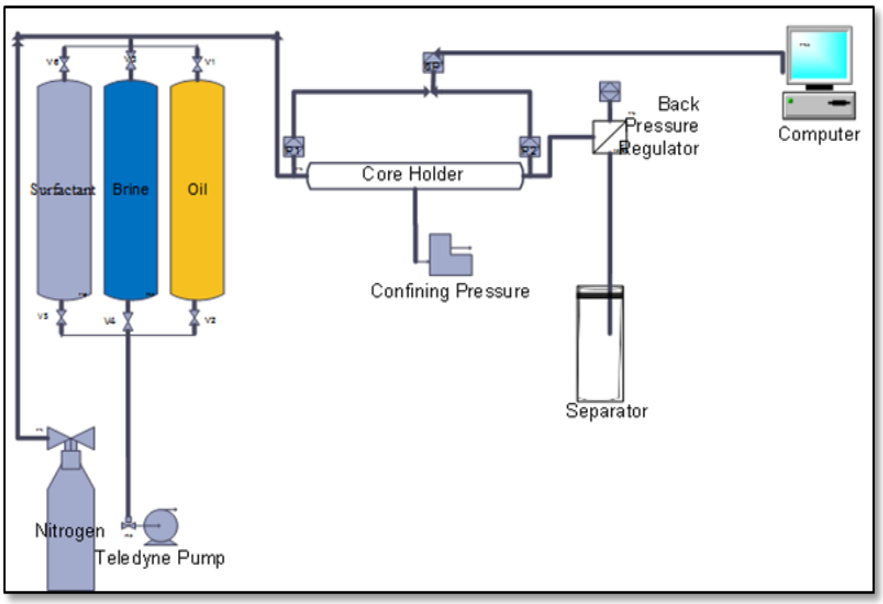

Figure 1: Schematic of coreflood apparatus

Discussion

The results from the aqueous stability test showed that AAS solution with hard brine did not become cloudy or form precipitates up to 5.7% salinity, at 6.0% - 7% salinity the solution stayed cloudy for about 10 minutes and became hazy at room temperature. When the solutions were placed in the oven for two days, they did not become completely clear. The surfactant blends of AAS/IOS were transparent from 1% salinity up to 7% salinity, this also was the case for AAS/MES. These two as they remained remained stable even at 60°C in the oven. The solution blend of AO/ AAS was discarded as the solution remained cloudy for three days. This shows that the combination of AAS/IOS and AAS/MES increases the stability of AAS in hard brine. Figure 2 shows the aqueous stability scan test with the surfactant, co-surfactant, and brine. The test tube with the cloudy solution are from aqueous stability test of AAS and AO while the test tubes on the right are clear, they are solutions for AAS/IOS, AAS alone and AAS/ MES blends.

Figure 2: Aqueous stability scan for brine and surfactant

Microemulsion phase behaviour

The microemulsion phase for AAS surfactant began to form after two hours at room temperature. When the pipettes were placed in the oven at 60°C, the type III microemulsion became visible at intermediate salinities. At the lowest salinities, type I microemulsion phase was formed. Type III microemulsion phase was noticed at salinities from 3%. For some salinities, no microemulsion phase was formed and these solutions were discarded. The microemulsion phases followed the typical Windsor phase behavior. As the salinity increases, the water solubilisation ratio decreased while the oil solubilisation ratio increased. The solubilisation ratio at optimal salinity was 9.5. The solubilisation ratio is high enough to achieve very low interfacial tension. The ability of very low concentration alcohol alkoxy sulfate to have high solubilisation ratio with hard brine is as a result of the propoxy group present in the surfactant and the match between the AAS chain length and the crude oil (Elraies and Shehzad-Ahmed.2014; Leung and Shah.1987). Although a high solubilisation ratio was achieved, the microemulsion phase formed in alcohol alkoxy sulfate with hard brine was viscous. Initially, when the phase became viscous, the pipettes were brought out of the oven and agitated several times to reduce the formation of viscous microemulsion phase. The high viscosity of microemulsion phase can cause high surfactant retention during surfactant flooding. This is due to the difficulty in transporting the fluids in the reservoir at low-pressure gradients. Figure 3 shows pipettes with microemulsion phase formed and figure 4 shows a plot of water and oil solubilisation ratio against salinity for phase behaviour test. The calculated interfacial tension for surfactant using Huh's correlation is 3.3×10^{-3}mN/m.

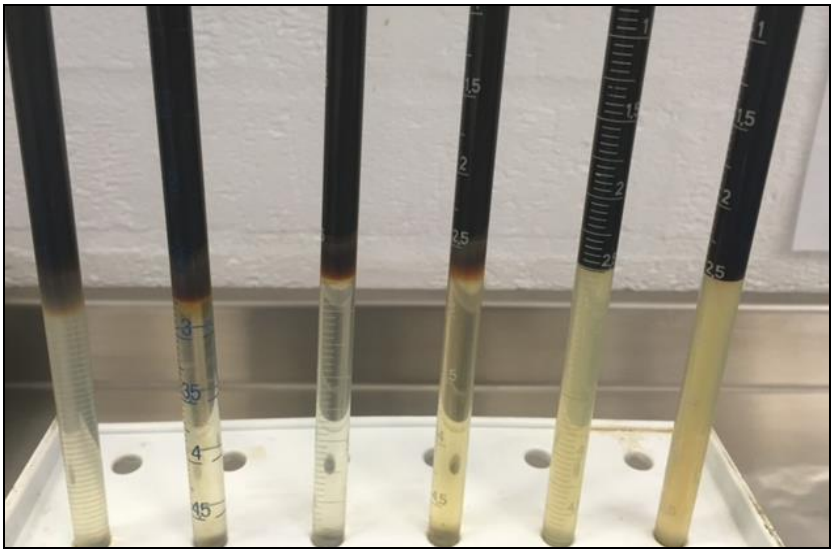

Figure 3: Microemulsion phase in pipettes

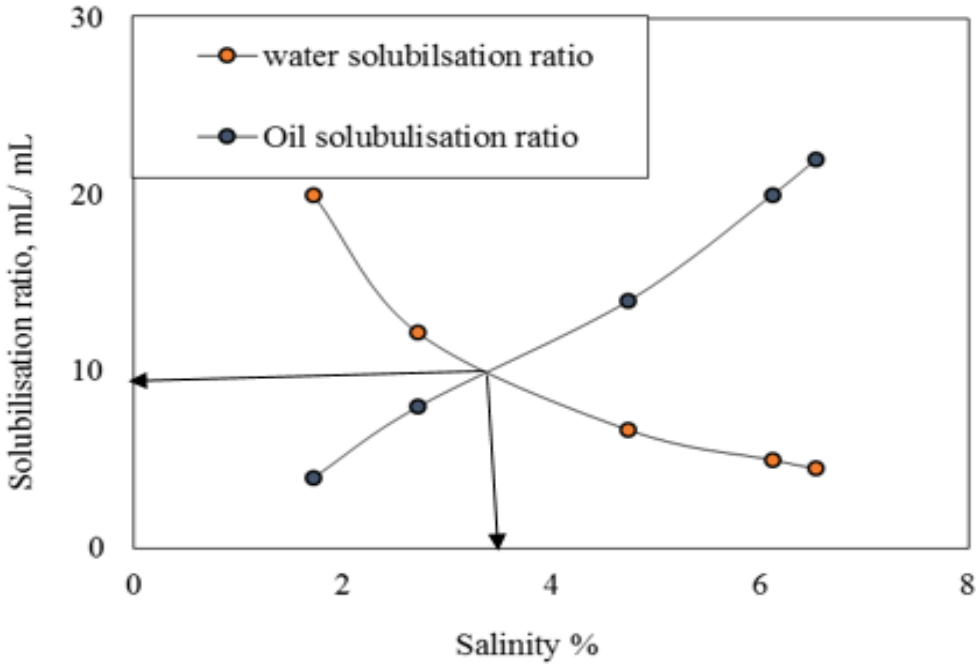

Figure 4: Microemulsion phase behaviour for alcohol alkoxy sulfate

Effect of co- surfactant internal olefin sulfonate

The most promising of all three surfactant blends is the alkoxy sulfate with internal olefin sulfonate. Formation of microemulsion phase started 30minutes after the surfactant blend was introduced into the pipette with the oil. As the solutions in the pipettes were placed in the oven, equilibration time for microemulsion phase became quicker compared to the other two surfactant blends. The micro emulsion phase formed was not viscous. The microemulsion phase transitioned from Type1 at low salinities from 1% to 3.08% while from 3.54 to 6.12% salinity. The middle phase Type III microemulsion phase was formed. From the phase behavior plot in figure 5, the solubilisation ratio at optimum salinity in the AAS/IOS blend was 17 compared to 9.5 0btained with AAS. This shows that optimizing AAS with IOS is very successful as it reduces the viscosity of AAS and increases the

solubilisation ratio. Thus, higher solubilisation ratio can lead to a very much lower interfacial tension as a solubilisation ratio of 10 can create an interfacial tension of 0.003mN/m (Levitt et al.2006). The plot of solubilisation ratio against salinity in figure 5 shows that the presence of internal olefin sulfonate as a co-surfactant resulted in a decrease in optimal salinity. This is because of the interaction between the sulfonate ions and divalent ions present in the brine. The optimal salinity has been described to be a linear deceasing function of the concentration of divalent ions associated with the sulfonate ions (Glover et al.1989). Using Huh's correlation, the calculated interfacial tension of this surfactant blend is 1.0 x 10^{-3}mN/m.

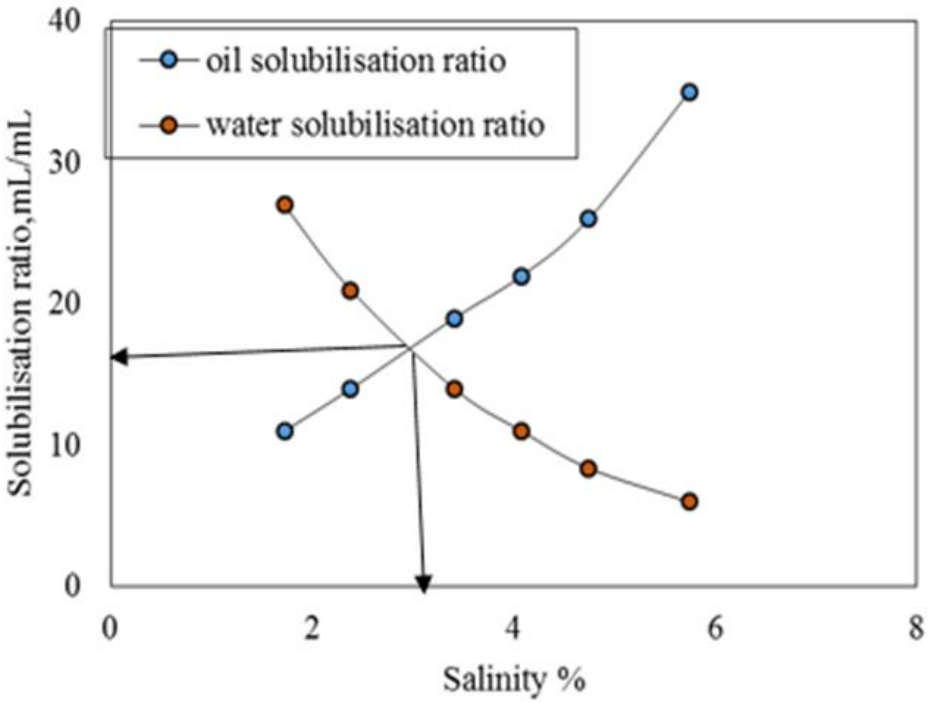

Figure 5: Microemulsion phase behaviour for AAS/IOS surfactant Blend

Effect of co-surfactant methyl ester sulfonate

The formation of microemulsion phase for the AAS and MES blends was slower compared to the AAS/IOS blends but equilibration was faster compared to AAS. The type III microemulsion phase formed from 3.8% salinity to 6.2% salinity. There were no microemulsion phases formed in the pipettes at very low salinities after seven days for this surfactant blend. No type I or Type II microemulsion phases were formed for this surfactant blend. The solutions in these pipettes were discarded. AAS/MES blend was able to form a gel-free and less viscous microemulsion phase. The solubilisation ratio at optimal salinity increased from 9.5 when only AAS was used to 14 when MES was introduced as a co-surfactant. There was an increase in the optimal salinity of this surfactant blend and this shift in optimal salinity can be as a result of short chain alcohol methanol present in the methyl ester sulfonate. As short chain alcohol can cause increase in optimal salinity (Sheng.2011). The water/oil solubilisation ratio plot in figure 6 shows the shift of optimal salinity when co-surfactant MES was introduced. Using Huh's correlation to calculate interfacial tension, the interfacial tension of this particular surfactant blend is 1.5x10^{-3}mN/m.

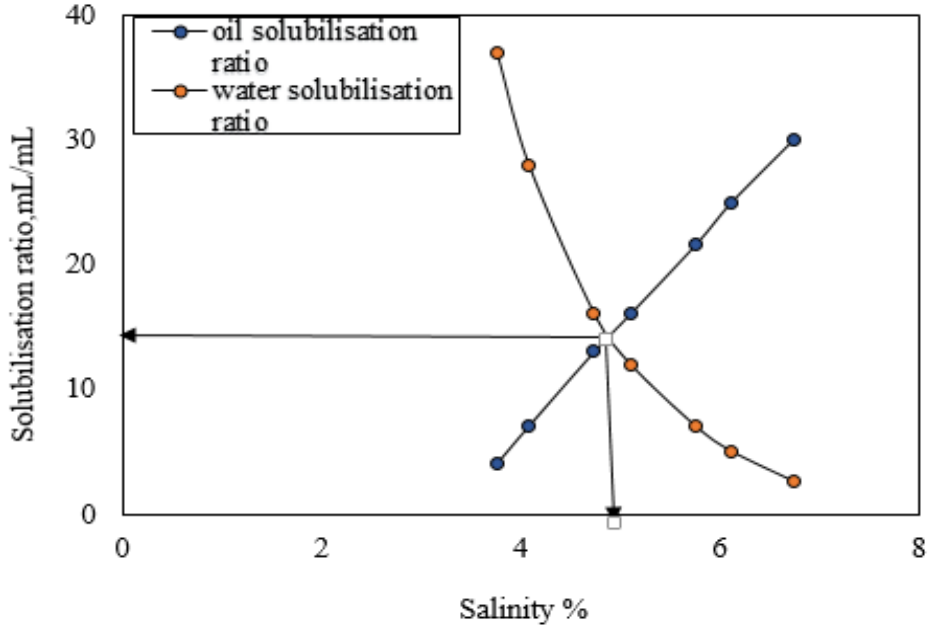

Figure 6: Microemulsion phase behaviour for AAS/MES blend

Oil recovery surfactant enhanced waterflooding

The confining pressure was monitored all through the experiment and reduced whenever it increased. The use of temperature during coreflooding caused the increase in confining pressure. Figure 7 shows a plot of oil recovery against pore volume injected for the three different surfactant blends and waterflooding. Results from the core flooding tests shows that the highest oil recovery was obtained with the AAS/IOS surfactant blend. There was no significant increase in oil recovery with AAS from waterflooding. The lack of significant change in the oil recovery during surfactant enhanced flooding with AAS maybe as a result of viscous microemulsion phase formed when AAS interacts with the oil and brine. AAS/MES blend was able to give an increase in oil recovery but a much lower oil recovery that the AAS/IOS blend. It was observed that oil recovery rate increased with AAS/IOS blend. Although water breakthrough was earlier than the AAS/MES and AAS, a substantial amount of oil had already been produced from the core sample.

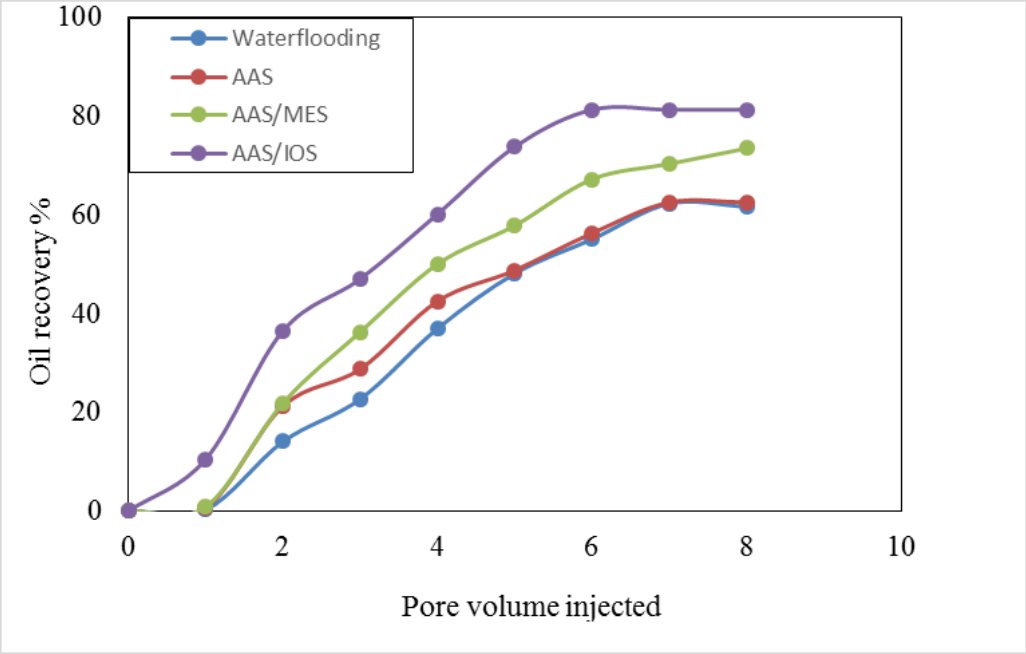

Figure 7: Oil Recovery for Surfactant flooding

Conclusions

The conclusions of this study are:

- Very low surfactant concentration can also create a type III microemulsion phase which is an indicator of creating low interfacial tension. Using Huh's correlation to calculate interfacial tension, the surfactant blend of AAS/IOS gave the lowest interfacial tension.
- Alcohol alkoxy sulfate can be made more stable at very high salinities in hard brine by introducing co-surfactants such as internal olefin sulfonate and methyl ester sulfonate. The surfactant alone in hard brine and medium crude oil creates a viscous microemulsion phase.
- The co-surfactants decreased equilibration time and were able to form a stable type III microemulsion phase. Ultra-low concentration of alcohol alkoxy sulfate with co-surfactant can create low interfacial tension as a solubilisation ratio greater than 10 was obtained from the phase behavior studies
- Oil recovery improved with ultra-low concentration alcohol alkoxy sulfate with co-surfactants methyl ester sulfonate and internal olefin sulfonate.
- The most promising co-surfactant to optimize alcohol alkoxy sulfate is the internal olefin sulfonate. As it has shown to increase solubilisation ratio and can create substantial oil recovery.

Acknowledgement

The author wishes to express their sincere gratitude to Niger Delta Development Commission, Nigeria for providing sponsorship for this Ph.D. research.

References

Ahmed, T., and Meehann, N. [2012] Advanced Reservoir Management and Engineering, 2nd Ed, Gulf Publishing, USA, 342-345

Anderson, D.R., Bidner, M.S., Davies, H.T., Manning, C.D. and Scriven, L.E. [1976] Interfacial Tension and Phase Behaviour in Surfactant-Brine-Oil Systems, Society of Petroleum Engineers, SPE5188

Bae, J.H., Petric, C.B. and Erlich, R. [1974] A comparative Evaluation of Microemulsions and Aqueous Surfactant Systems, SPE-AIME 4749, 1-8

Barnes, R.J., Smitt, J.P., Smitt, J.R. [2008] Development of Surfactants for Chemical Flooding at Difficult Reservoir Conditions, SPE Journal, 1-12

Bera, A. Ojha, K. Mandal, A. and Kumar, T. [2011] Interfacial Tension and Phase Behaviour of Surfactant-Brine-Oil System, Journal of Colloid and Surfaces: A physiochemical and Engineering Aspects, 114-119

Buijse, M.A., Prelicz, R.M., Barnes, J. R., and Cosmo, C. [2010] Application of Internal Olefin Sulfonates and Other Surfactants to EOR. Part 2: The Design and Execution of an ASP Field Test. SPE Journal 129769

Cayais, J.L., Schechter, R.S., Wade. W.H [1976] Modelling Crude Oil for Low Interfacial Tension, SPE 5813, 351-356

Chou, S.I. and Shah, D .O [1981] The Optimal Salinity Concept for Oil Displacement by Oil-External Microemulsion and Graded Salinity Slugs, Journal of Canadian Petroleum and Technology, 1-9

Donaldson, E.C., Chilingarian, G.V. and Yen, T.F. [1989] Enhanced Oil Recovery II, Processes and Operations, Elsevier Science Publishers, Netherland, ISBN: 978-0-444-42933-9

Elmofty, O. [2012] Surfactant Enhanced Oil Recovery by Wettability Alteration of Sandstone Reservoirs, Master's Thesis Paper 6928, Department of Geoscience, Geological and Petroleum Engineering, University of Missouri

Elraeis, K.A. and Ahmed, S. [2014] Mechanisms of Surfactant in Microemulsion Phase Behaviour, Journal of Applied Sciences, 1049-1052

Fuseni, A., Han, M., and Al-Mobith, A. [2013] Phase Behaviour and Interfacial Tension Properties of an Amphoteric Surfactant for EOR application, SPE Journal,1-11

Glover, C.J., Puerto, M.C., Maerker. J.M., Sandvick. E.L. [1979] Surfactant Phase Behaviour and Retention in the Porous Media, SPE- AIME 7063, 1-11

Green, D.W. and Willhite, P.G. [1998] Enhanced Oil Recovery, Society of Petroleum Engineers Text book Series, 9

Healy, R.N., Reed. R.L. and Sternmark. D.G. [1976] Microemulsion Phase Systems, SPE Journal, 1-14

Hirasaki, G. J, Miller, C. J., and Puerto, M. C. [2011] Recent Advances in Surfactant EOR. SPE Journal, 889-907

Huh, C. [1979] Interfacial Tension and Solubilisation Ability of Microemulsion Phase that Co-Exist with Bine and Oil, Journal of Colloid and Interface Science

Iglauer, S., Wu, Y., Shuler. P, Tang. Y. and Goddard, W. [2010] New Surfactant Classes for Enhanced Oil Recovery and their Tertiary Oil Recovery Potential, Journal of Petroleum Science and Engineering, 23-29

Kokal, S., and Al- Kaabi, A. [2010] Enhanced Oil Recovery: Challenges and Opportunities, Expec Advanced Research Centre, Saudi Aramco, 65-69

Levitt, D.B., Jackson, A.C., Heinson, C., Britton, L.N., Malik, T., Dwarakanath, V. and Pope, G.A. [2006] Identification and Evaluation of High-Performance EOR Surfactants, SPE Journal, 1-11

Leung, R. and Shah, D.O. [1987] Solubilisation and phase equilibria of water-in-oil microemulsions: II. Effects of alcohols, oils and salinity on single-chain surfactant systems. J. Colloid Interface Sci., 120: 330-344.

Majidae. S., Onur, M. and Tan, I.M. [2015] An Experimental and Numerical Study of Chemically Enhanced Water Alternating Gas Injection, Springer Journal,

Michels, A.M., Djojosoeparto, R.S., Hass, H., Mattern. R.B., Van Der Weg, P.B., and Schulte, W.M. [1996] Enhanced Waterflooding Design with Dilute Surfactant Concentration for North Sea Conditions, SPE Journal 35372, 1-7

Puerto. M., Hirasaki, G.J., Miller, A.C., Reznik, C., Dubey, S., Barnes, J.R., and Kuijk, S. [2014] Effect of Hardness and Co-surfactant on Phase Behaviour of Alcohol-Free Akyl Propoxylated Sulfate Systems, SPE Journal, 1-10

Pwaga, S., Illoure, C., Hunseth, Ø., Perales ,F.J. and Idrees, M.U. [2010] Comparative Study of Different Enhanced Oil Recovery Methods, Department of Petroleum Engineering, Norwegian University of Science and Technology,pp7-10

Salager, J.L., Morgan, J.C., Schechter, R.S., Wade. W.H. and Vasquez, E [1979] Optimum Formulation of Surfactant/Water/Oil System for Minimum Interfacial Tension of Phase Behaviour, SPE Journal, 108

Sheng, J. [2015] Status of Surfactant EOR technology, Science Direct Journal, 99-105

Sheng, J. [2011] Modern Chemical Enhanced Oil Recovery: Theory and Practice, Gulf Publishing, USA, ISBN 978-1-85617-745-0

Spildo, K., Sun, L., Djurhuus, K., and Skauge, A. [2014] A strategy for low Cost, Effective Surfactant Injection, Journal of Petroleum Science and Engineering, 1-7

Terry, R.E. [2001] Enhanced Oil Recovery, Encyclopedia of Physical Science and Technology, 3rd Ed, Vol 18, Academic Press, 507

Terry, R.E. [2001] Enhanced Oil Recovery, Encyclopedia of Physical and Technology, 3rd Edition, Vol 18, 503-508

Thomas, S. [2008] Enhanced Oil Recovery-An Overview, Oil & Gas Science and Technology-Rev IFP, Vol 63, 9-19

Zitha, P., Felder, R., Zornes, D., Brown, K., and Mohanty, K. [2011] Increasing Hydrocarbons Recovery Factors, SPE Paper.